WRECK MASTER'S MANUAL

WIRE ROPE SLING DEPARTMENT • AMERICAN CHAIN & CABLE COMPANY, INC.

FOREWORD

Why this Manual • Perhaps it will appear unusual that a Wire Rope manufacturer should publish a "Wreck Master's Manual." The subject is one that would not normally come within the experience of Wire Rope Engineers. Therefore, if only the wire rope part of the handling of wrecks was to be considered this publication could be only a catalog of special slings. It is much more than that as will be explained in the following paragraphs.

A large number of the railroads as well as the major producers of Diesel-Electric Locomotives have been users of Acco-Registered Wire Rope Slings for a number of years. It became evident, from inquiries we received from both sources, that some form of publication was necessary to make up-to-date information on the more recent types of railroad equipment available to the men who handle it under abnormal conditions.

Such a publication, we believed, would be a service to both the manufacturer of locomotives and cars and to the railroads. Since, basically, the final problem is one of sling selection and attachment the American Chain and Cable Company, Inc., believed that it was a proper field for investigation by the Wire Rope Sling Department.

Data Source • Over three years have been spent in the preparation of the material presented herein. Manufacturers of the locomotives and cars covered in the various sections furnished information covering down-loads, hard spots and points which would require protection during lifting. Trips were made to

the various plants and the actual structures were studied during the various stages of fabrication.

Much of this information was confidential in nature, and each section is passed upon by the manufacturer of the equipment covered before release for publication.

Double Checked • Then we went back to the railroads with this information. Superintendents of Motive Power, Mechanical Officers and Engineers, Master Mechanics, and Wreck Masters all contributed their part. Wrecks were studied and their handling analyzed. Methods of lifting used and the effects of the methods on the equipment were checked. Limitations of existing wrecker equipment were considered and means for overcoming a part, at least, of these limitations devised.

Practical Experience • Suggestions from men who have spent their lives in this type of work have been incorporated to furnish the "hard-practical" experience necessary to make the Wreck Master's Manual usable.

Sling Strength • In designing the slings to be recommended we had a sound basis to start with. The Acco-Loc Splice insured that we would have a "KNOWN STRENGTH" which would eliminate splice loss from our calculations. The many tests, coupled with years of experience, not only in the railroad service but in all phases of industrial service as well, proved that we had developed a wire rope that was capable of resisting use operations with the very minimum of strength deterioration. The practice of designing all attachments used on Acco-Registered Wire Rope Slings to equal or exceed the strength of the wire rope and then Proof-Testing the completed assembly at a load equal to two times the rated capacity, removes all of the unknown factors.

Easier Handling • With this beginning it was possible to answer the request of the Railroads for lighter, easier-handled slings. Heavy end-

ings are no longer necessary to insure safe operations and large diametered ropes have been eliminated in the majority of cases.

Safety Factor • With a definite, known strength to start with and with all of this strength actually available to meet the variation in load conditions it has been possible to drop the safety factor to a minimum of 3.5 to 1 without actually sacrificing safety. This fact has been used particularly in designing slings which must be applied under conditions of close clearances or which must be handled by hand.

Index • Due to pressure from certain railroads it was decided to issue the Wreck Master's Manual without waiting until all of the sections were completed. Therefore, as issued the manual will contain:

Section 1 — Budd Streamlined Cars

Section 2 — Electro-Motive Division Locomotives

The following sections are in preparation and are scheduled for issuance in the order given:

Section 3 — American Locomotive Diesel Electric Locomotives

Section 4 — Fairbanks-Morse Diesel Electric Locomotives

Section 5 — Baldwin Diesel Electric Locomotives

Section 6 — Pullman Standard Streamlined Cars

Section 7 — Lima-Hamilton Diesel-Electric Locomotives

These sections will be forwarded upon request to the holders of the manual as issued originally.

Up-to-date Revisions • The rapid changes in design of Railroad Equipment requires constant revision to keep the material current in a publication such as this one. American Chain and Cable Company, Inc., will make every effort to keep the Wreck Master's Manual up-to-date. However, we will frequently

have material in preparation which may be the answer to an immediate problem of a particular railroad. In such cases we will be glad to send out, upon specific request, an advance sheet.

Scope • Experience has proven that no publication can replace the actual experience of a Wreck Master. It is his responsibility alone to properly balance the existing conditions of the wreck against equipment available and decide the action indicated. To do this requires knowledge of the capacities of his wrecker equipment, the hazard to life involved, the present damage to the locomotive and cars, and the steps necessary to minimize further damage.

Therefore, the information and recommendations herein contained do not attempt to make, a decision for him, but instead are designed to make more information available to him for use in making his decision.

It is upon this basis only that The Wreck Master's Manual is offered by the

WIRE ROPE SLING DEPT.
American Chain & Cable Company, Inc.

LIFTING DATA

on

Standard Railway Passenger Cars

manufactured by

THE BUDD COMPANY

PHILADELPHIA, PA.

Section 1

WRECK MASTER'S MANUAL

WIRE ROPE SLING DEPARTMENT
American Chain & Cable Company, Inc.
Wilkes-Barre, Pa.

(Copyright, 1949)

LIFTING INFORMATION — BUDD CARS

Naturally, the cars produced by The Budd Company, of Philadelphia, Pa., have been subject to variation by the requirements of the individual railroads. For this reason, exact information on all cars cannot be given. Instead, it is the purpose of the American Chain & Cable Co., Inc., in preparing this section, to work to the heaviest loads of standard types of cars and the design of slings recommended provides a Safety Factor adequate to cover individual variations.

On the basis of lifting facilities provided by the manufacturer, Budd cars can be divided into three general classes:

EARLY TYPES

The only provision for lifting on the first models was Jacking Pads located either on, or just off, the body bolster and approximately 6" inside of the car side sill. Although perfectly adequate for shop use, these pads proved unsatisfactory for handling cars under wreck conditions. Hooking on with a sling usually resulted in crushing the skirt section covering the trucks and frequently the car sheathing as well unless extensive use was made of blocking.

Where only one end is to be lifted, the most practical hitch is on the coupler and if the coupler is adequately blocked little damage should result to either the car or equipment from the lift.

LATER PRE-WAR TYPES

Recognizing the necessity for adequate means of sling attachment, the later pre-war cars were provided with a 2" hole through the collision post (Fig. 1, pg. 7). However, a special lifting bar, (shown in Fig. 2, pg. 7), is required for actually attaching the sling.

To reach these holes and to permit insertion of the bar, it is necessary to cut away the rubber outside diaphragm of the car.

Collision posts are specially braced at these points and the ACCO-Registered Sling RR-BC-1 can be used with the lifting bar to either lift or roll the car.

POST-WAR AND CURRENT TYPES

Post-war and current model cars also have specially braced holes in the collision posts. However, these cars have permanent openings in the top giving direct access to the holes (shown in Fig. 3, pg. 7), and no lifting bar is required. ACCO-Registered Sling RR-BC-1 is designed for this lift.

Lifting facilities (shown in Fig. 3, pg. 7) are provided on each end of standard post-war cars with the exception of the Rounded-End, Observation Type Car, where it is provided on the front end only. The rear end has holes in the collision post on either side of the rear door. The openings are covered by the car sheathing and are reached as follows:

A. First, remove the glazing rubbers from the two rear side windows.

B. Deadlight or outside pier panels can then be snapped out from molding.

The location of these holes and method of reaching as well as manner of sling attachment are shown in Fig. 7, pg. 11.

Due to the position of these holes, a longer sling is necessary and special hooks are required to avoid damage to the car.

ACCO-Registered Sling RR-BC-3 is designed for this lift.

COUPLER HITCH

The car frames and end-sills of cars manufactured by The Budd Company are amply strong to withstand lifts using the coupler hitch. However, with the exception of the earliest types of cars, where it is usually the most practical hitch, the coupler hitch is not recommended. This is due to the fact that the use of ACCO-Registered Slings RR-BC-1 and RR-BC-3 place less strain on the car, gives greater stability of lift, and minimize the possibility of crushing action of the sling on unsupported portions of car body.

Where the coupler lift is used in an emergency, it is necessary to block between the coupler and the end frame of the car as shown in Figs. 4, 5 and 6 on pgs. 7, 9 and 11.

ACCO-Registered Sling RR-BC-2 is designed particularly for the coupler lift on Budd cars. It is of the correct length to insure against the wrecker hook bearing on the car, of strength sufficient to give an adequate Safety Factor and of special construction to resist the crushing action on the coupler bar with minimum loss of strength.

REMOVAL OF TRUCKS

The car frames are braced so that trucks are normally lifted with the car body and the down-loads used in recommending the slings are with trucks attached.

Where desirable to drop the trucks, it is done as follows:

A. On pre-war cars, remove the nut on bottom of the center-pin locking pin. The two halves may then be removed individually.

B. On post-war cars, center-pin is also split, but is held in place by a locking pin inserted between the two halves. Pressing the locking pin upward and giving it a quarter turn to the right allows it to be withdrawn. The halves of the center-pin can then be removed individually.

NOTE: On cars furnished to N.Y.C. R.R., the center-pins are removed UPWARD through the opening provided in the car floor.

Truck weights are approximately as follows:

Journal Size	*Weight of Truck With Generator Drive*	*Without Generator Drive*
6″ x 11″	21,000 lbs.	20,000 lbs.
5½″ x 10″	18,500 lbs.	17,600 lbs.

BUDD

Standard Square End — Passenger Car

This type of car used for —

Baggage Cars
Dining Cars
Bedroom and Cabin Sleepers
Coaches
Chair Lounges

The heaviest of these is the # 1 Diner.
Total weight is 140,660 lbs.

APPROXIMATE DOWN-LOADS

Actual weight of car will vary with type of car and with placement and type of furniture. Approximate down-loads are given below for the # 1 Diner. Safety factor of slings specified is sufficient to safely absorb individual variations.

LIFTING AT	FULCRUM	APPROXIMATE DOWN-LOADS					
		A	B*	C*	D	E	F
A	C	54,000#		86,660#			
D	B		78,460#		62,200#		
E	B		78,660#			62,000#	53,700#
F	C			86,960#			
A & D		67,000#			73,660#		
B & C*			65,480#	75,180#			

*Note: Lifts at B and C suitable for JACKS ONLY on late pre-war and all post-war cars. Lifting at E and F simultaneously DANGEROUS.

Standard Square End — Passenger Car

Post-war Model

ACCO Registered RR-BC-1 Sling. This sling gives safety factor of 4.7 to 1 at heaviest lift shown.

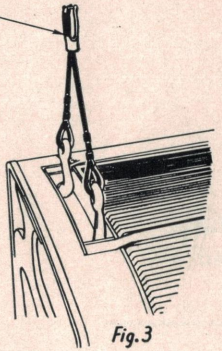

Fig. 3

Late Pre-war Model

The collision post is heavily braced at attachment points shown in Figs. 1 and 3. When used as indicated, ACCO Registered Sling RR-BC-1 can be used either to lift or roll cars.

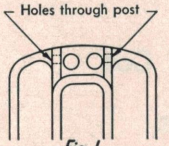

Fig. 1

On late pre-war cars, it is necessary to cut away the rubber end-apron to reach these holes. Special lifting bar (Fig. 2) is required on these cars for sling attachment.

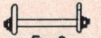

Fig. 2

For Early Model Cars or Late Model Emergency Use

The ACCO Registered Coupler Sling RR-BC-2, is recommended for use on early model cars or for emergency use only on late pre-war and current post-war model cars. IN ALL CASES, the blocking indicated below, should be used to minimize probability of damage to the coupler or crumpling of body structure.

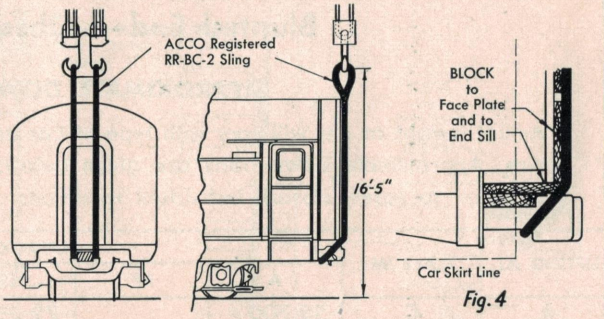

Fig. 4

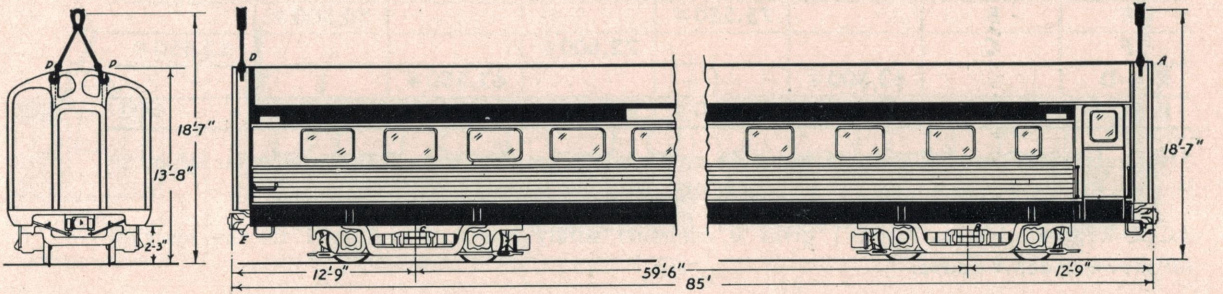

BUDD

Blunted End — Observation Car

APPROXIMATE DOWN-LOADS

Actual weight of car will vary with type of car and with placement and type of furniture. Approximate down-loads are given below. Safety factor of slings specified is sufficient to safely absorb individual variations.

LIFTING AT	FULCRUM	APPROXIMATE DOWN-LOADS					
		A	B*	C*	D	E	F
A	C	53,700#		72,350#			
D	B		74,850#		51,200#		
E	B		75,550#			50,500#	
F	C			72,600#			53,450#
A & D		63,500#			62,550#		
B & C*			64,630#	61,420#			

*Note: Lifts at B and C suitable for jacks only on late pre-war and all post-war cars. Lifting at E and F simultaneously DANGEROUS.

ACCO-Registered Sling RR-BC-1 gives a minimum safety factor of 5.6 to 1 on the heaviest lift shown under A above.

Blunted End — Observation Car

For Early Model Cars or Late Model Emergency Use

The ACCO Registered Coupler Sling RR-BC-2, is recommended for use on early model cars or for emergency use only on late pre-war and current post-war model cars. IN ALL CASES, the blocking indicated below, should be used to minimize probability of damage to the coupler or crumpling of body structure.

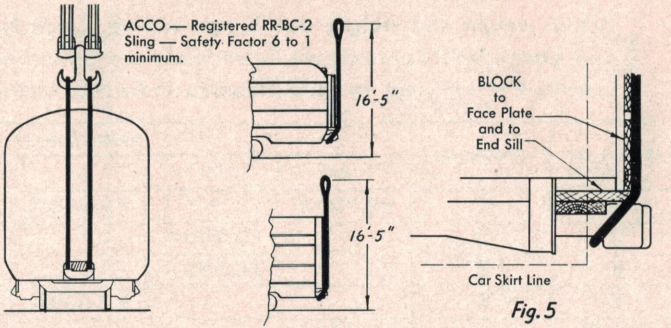

Fig. 5

Post-war Model

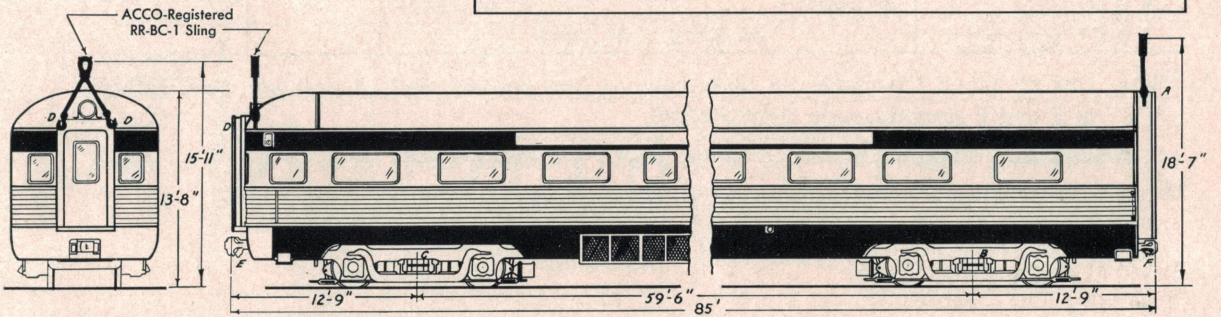

BUDD

Rounded End — Observation Car

APPROXIMATE DOWN-LOADS

Actual weight and weight distribution will vary with type and placement of furniture and equipment. Approximate down-loads are given below. Safety factor of the slings specified is sufficient to safely absorb individual variations.

LIFTING AT	FULCRUM	APPROXIMATE DOWN-LOADS					
		A	B*	C*	D	E	F
A	C	53,700#		72,350#			
D	B		75,250#		50,800#		
E	B		75,550#			50,500#	
F	C			72,600#			53,450#
A & D		64,300#			61,750#		
B & C*			64,630#	61,420#			

*Note: Lifts at B and C suitable for jacks only on late pre-war and all post-war cars. Lifting at E and F simultaneously DANGEROUS.

ACCO-Registered Slings RR-BC-1 and RR-BC-3 give a minimum safety factor of 5 to 1 on heaviest loads shown under A and D above.

Rounded End — Observation Car

Post-war Model

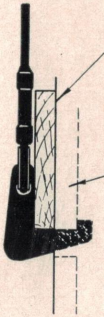

Detail of lift at "D"

For Early Model Cars or Late Model Emergency Use

The ACCO Registered Coupler Sling RR-BC-2, is recommended for use on early model cars or for emergency use only on late pre-war and current post-war model cars. IN ALL CASES, the blocking indicated below, should be used to minimize probability of damage to the coupler or crumpling of body structure.

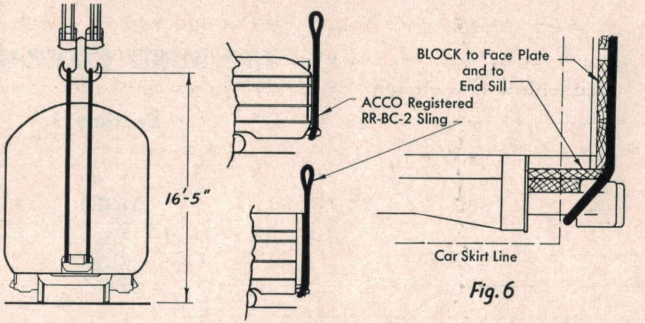

Fig. 6

Note:
To reach openings D-D —
1. Remove glazing rubbers.
2. Rear deadlight panels can be snapped out from under moulding.

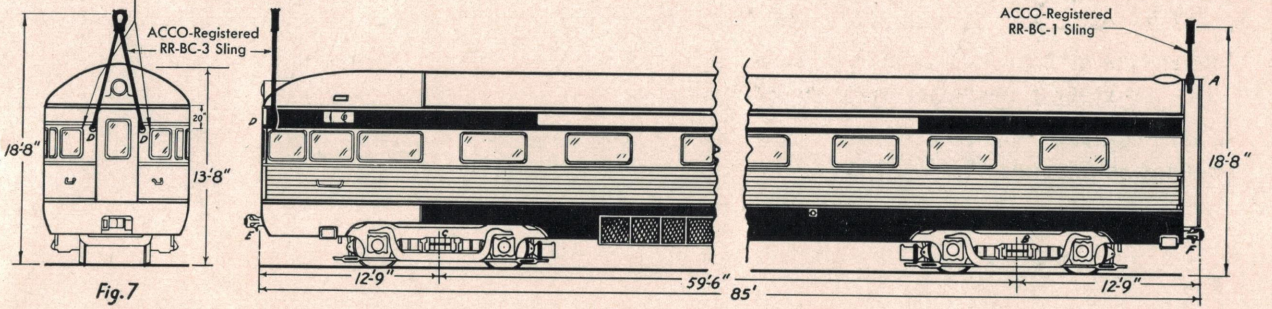

Fig. 7

THE BUDD COMPANY

Section 1

ACCO

TRADE MARK

PRINTED IN U.S.A.

LIFTING DATA

on

Diesel-Electric Railroad Motive Power

manufactured by

Electro-Motive Division
GENERAL MOTORS CORPORATION

LaGRANGE, ILL.

Section 2

WRECK MASTER'S MANUAL

WIRE ROPE SLING DEPARTMENT
American Chain & Cable Company, Inc.
Wilkes-Barre, Pa.

(*Copyright, 1949*)

LIFTING INFORMATION

EMD DIESEL-ELECTRIC LOCOMOTIVES AND SWITCHERS

Manufactured by
Electro-Motive Division
General Motors Corporation
LaGrange, Illinois

Electro-Motive was not only a pioneer in development of the Diesel-Electric Locomotive, but also introduced the mass production of standardized Motive Power for railroads. This was a major step in the reduction of maintenance problems and, what is more important to the Wreck Master, greatly simplified the lifting operations.

Through the years which have passed since the M-300 was placed in service in 1924 by the Chicago Great Western, there has been considerable change. Many of the earlier models were custom-made for a specialized service and only a few ever produced. Even if it were possible to give detailed information on all models, most of the information would have little practical value to the Wreck Master.

Instead, it is the purpose of this section to cover only current models or those still in general use. Therefore, in designing the slings illustrated and in making the recommendations covered by this section, the following listed EMD models were considered. Standardization of EMD equipment makes it possible to divide the models into 3 classes with general recommendations which cover all units within each class.

1. **EMD Passenger, Road Locomotives —**
   E-6 2000 H.P.—"A" and "B" Units—
   Type 0-6-6-0 per unit.

   E-7 2000 H.P.—"A" and "B" Units—
   Type 0-6-6-0 per unit.

   (For general lifting diagram see Fig. 5)

2. **EMD Freight, Road Locomotives —**
   FT-2700 H.P.—(Two permanently coupled 1350 H.P. Units)—Type 0-4-4-0 per unit.
   F2-1350 H.P.—"A" and "B" Units (may be permanently coupled)—Type 0-4-4-0 per unit.
   F3-1500 H.P. "A" and "B" Units—Type 0-4-4-0 per unit.
   (For general lifting diagram see Fig. 10)
3. **EMD Hood Type Switchers —**
   NW-3—1000 H.P. Road Switcher—Type 0-4-4-0.
   NW-2—1000 H.P. Standard Switcher Type 0-4-4-0.
   SW-1—600 H.P. Standard Switcher—Type 0-4-4-0.
   TR—Consists of two NW-2 units permanently coupled and with controls in first unit only.—Total 2000 H.P.
   TR-1—Consists of two permanently coupled units having same equipment as the FT units but of hood design.—Total 2700 H.P.
   (For general lifting diagram see Fig. 16.)

Recently a new design of Branch Line Locomotive (BL-2) has been produced. This locomotive is a modification of the F-3 and usually operated as a single unit. No general lifting diagram is given for this model. However, it closely follows the F-3 and general recommendations apply.

EMD PASSENGER AND FREIGHT ROAD LOCOMOTIVES

General Lifting Data

All EMD Road Locomotives except the NW-3 Road Switcher (Fig. 16) and the BL-2 Branch Line Locomotive were designed to be lifted using special lifting levers which lock under the jacking pads located at body bolster.

These levers are not standard equipment with the locomotives, but are cast upon order of the railroad from patterns available through Electro-Motive Division, LaGrange, Illinois.

They are of two general designs depending upon the particular equipment to be handled. The lever for Freight Units is a Double or "Horse-Shoe" design (See Fig. 10), while the Lever for Passenger Units is a Single or Bar Type. (See Fig. 5.)

EMD Lever No.	USED On Locomotive Type	CLASS Of Service
8059378	FT	FREIGHT
8095116	F-2	FREIGHT
	F-3	FREIGHT OR PASSENGER
	F-7	FREIGHT
8101453	E-6 and Earlier	PASSENGER
8121267	E-7	PASSENGER

Actually the lifting levers are practical only in cases of simple derailment or truck removal. Here they do offer certain advantages. They permit lifting at the bolsters and, therefore, insure against springing the locomotive frame. In addition, the levers provide for clearance between sling and side sheathing, so that when used with proper lifting beams no blocking is required, (see Fig. 5 and Fig. 10).

Acco-Registered Sling RR-EMD-1 is specifically designed for this type of lift and the connectors shown will fit all types of EMD levers. For location of lifting points, method of attaching, down-loads, and required "hook-to-rail" distance for re-railing see Fig. 5, Fig. 10, Table 1, and Table 2.

NOTE — The use of standard types of shackles for connecting slings to EMD lifting levers is not regarded as safe practice. The connectors furnished with RR-EMD-1 slings are specially heat treated and are provided with Alloy Steel Safety Pin, which will withstand the full breaking strength of the sling with minimum distortion.

Lifting beams indicated on lifting diagrams are NOT furnished by American Chain & Cable Company, Inc.

While the use of lifting levers is satisfactory under conditions specified above they have not proven too practical for general Wrecker use. In the first place, the weight of the levers makes their handling difficult if it must be done by hand. In addition, this weight plus clearances required causes it to be hard to put the levers in place where the locomotive is not in a vertical position. Also, the fact that the levers are not interchangeable requires the wrecker to have the particular lever designed for each type of equipment to be lifted.

Perhaps the most important objection to use of the lifting lever is found when lifting the front end of an "A" unit. Unless the lift can be made from the side, the boom length of the standard 150 ton wrecker cannot reach

back to the bolster at the required height even if the crane had the necessary capacity at that radius. This is particularly true of the FT Front Unit and both EA-6 and EA-7 Units.

(For distance from coupler to body bolster and for overall height to determine minimum required boom length and lifting radius, see Figs. 5 and 10 and Table 1.)

Electro-Motive has recognized this situation and taken steps to correct it. The company has recently completed design of permanently installed, hinged Lifting Bars for the front end of "A" Units.

These bars are located approx. 50 inches on each side of the center-line of the locomotive and immediately above the anti-Climb Iron. When not in use, the bars are covered by inconspicuous plates, but are readily available for use.

The bars require a special sling connector which acts as a lock on the bar also. ACCO-Registered Sling RR-EMD-2 is equipped with a heat treated Connector using an Alloy pin. As with all Registered Slings, the connectors are subjected to the same proof-test as the wire rope assembly and are guaranteed to equal or exceed the sling in strength.

Special Lifting Lugs can be installed on the "Anti-Telescoping Plates" on the rear end of "A" Units and on both ends of "B" Units.

The Lifting Bars and Lifting Lugs can be obtained on new Locomotives and can be applied to all existing locomotives of current series. Their use permits all wreck cranes of sufficient capacity, but with standard length booms, to handle EMD locomotives. By shortening the "lifting distance" they lower the required capacity and give an additional advantage by permitting satisfactory lifts without using a lifting beam.

However, it is necessary to observe the lifting cautions, given below, in making lifts using these attachments.

ACCO Registered Slings RR-EMD-2 and RR-EMD-3 are designed to be used with locomotives equipped with the Lifting Bars and Lifting Lugs. Each sling is equipped with proof-tested connectors specifically designed to fit the equipment. Sling lengths have been held to require the same overhead clearance to rerail as that required by RR-EMD-1.

For down loads and minimum safety factors using ACCO Registered slings, see Tables 1 and 2.

TABLE NO. 2

Approximate Down-Loads and Lifting Specifications

Electro-Motive Freight Locomotives — F3-A (240,000 lbs.)

NOTE — Actual weight of locomotive may vary because of amount and type of accessory equipment, amount of fuel, oil, etc. However, loadings given are heaviest reported. Safety Factors of ACCO-Registered Railroad Slings are based on these weights.

Lifting at	Fulcrum	A	B	C	D	E	F	G	Acco Sling	Minimum† Safety Factor	Maximum* Lifting Distance
B & C			117,000	123,000					4-RR-EMD-1	5.8 to 1	10′-8″‡
A	C	93,200		146,800					1-RR-EMD-2	7.3 to 1	3′
G§	C			143,000				97,000	(See Note #4)	6.5 to 1	4′-8″
F	C			152,000			88,000		1-RR-EMD-5	7.0 to 1	—
D	B		134,000		100,000				1-RR-EMD-3	7.4 to 1	1′-8″
E	B		142,000			97,400			1-RR-EMD-5	6.5 to 1	—
A & C		93,200		146,800					1-RR-EMD-2 2-RR-EMD-1	4.8 to 1	8′-6″
D & B			134,000		100,000				1-RR-EMD-3 2-RR-EMD-1	5.3 to 1	10′-8″

TYPES

F-2
F-3
F-7
A & B Units

MAXIMUM WEIGHT — 230,000 lbs.
HORSEPOWER — 1,500 per unit

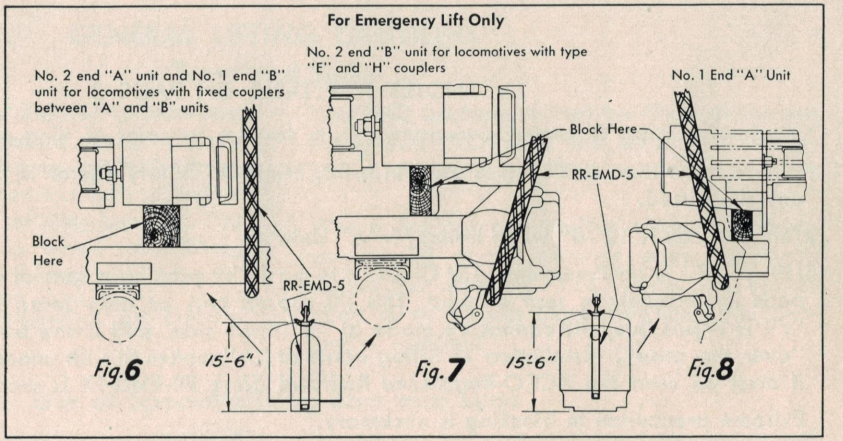

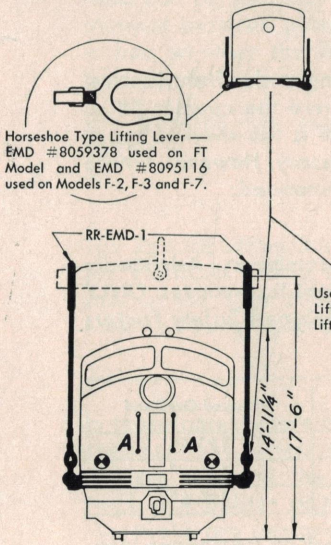

Fig.9

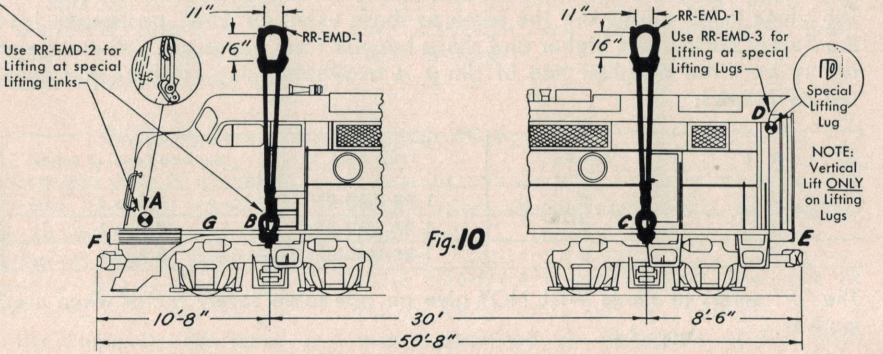

Fig.10

NOTE: Locomotive can be lifted at extreme end PROVIDED opposite end is supported at bolster.
For attaching rear lifting lugs — see EMD Print #8131839.

NOTES FOR TABLE ON PAGE 8

*Maximum Lifting Distance is measured from coupler to point of sling attachment.

†Where more than one sling is used in a lift, Minimum Safety Factor is the lowest developed by any sling used.

‡This distance is 12′-8″ when lifting FT-"A" Unit.

§Lift at "G" is an Emergency Lift ONLY. It is made by passing a special sling under front jacking pads immediately in rear of pilot. This lift should only be considered where the coupler lift at "F" is impossible, lift cannot be made at "B" from side, and crane boom is too short to reach "over the nose". Installation of lifting horns at "A" makes this lift unnecessary. However, where it must be used the ACCO-Registered Railroad Sling RR-EMD-FX is recommended.

Extreme precaution in blocking is necessary.

The slings listed above are the same as those used on EMD passenger locomotives. Admittedly the Safety Factors are higher and slings heavier than necessary. Where freight locomotives ONLY are to be lifted a lighter line of slings is available. Sling numbers and developed Safety Factors are as follows:

Lift At	*Fulcrum*	*ACCO Sling*	*Minimum Factor of Safety*	*Required Overhead*
A	C	1-RR-EMD-2F	4.0 to 1	17′-6″
F	C	1-RR-EMD-5F	4.9 to 1	15′-6″
D	B	1-RR-EMD-3F	3.6 to 1	17′-6″

The "F" series of slings WILL NOT give an adequate safety factor when used on passenger locomotives.

GENERAL LIFTING CAUTIONS

Permitted Span

The frames of all Diesel-Electric Locomotives are designed to be supported at the bolsters. Even the high strength frames of EMD Equipment can be strained when too long a span is allowed between points of sling support. This is true whether the lift is made from lifting horns or from couplers, or rear jacking pads.

The general rule recommended by Electro-Motive is:

"An EMD Locomotive can be lifted at the extreme end PROVIDED the other end is supported AT THE BOLSTER."

Where, for any reason, it is absolutely necessary to lift at the extreme ends the trucks should be dropped. This lowers the weight lifted 40 to 50 tons depending upon the locomotive involved.

Use of Special Lifting Bars and Lugs

The Special Lifting Bars and Lugs are designed for VERTICAL Lifting Only. Particularly is this true of the Lugs attached to the "Anti-Telescoping Plates" and any attempt to slide the locomotive by attaching to these points will very probably result in considerable additional damage.

Protection of Truck Center Plates

In those cases where one end only of a Diesel Locomotive is lifted care must be taken to prevent cracking the center plates between truck and bolster at the other end. Although the trucks are designed so that one end can drop considerable BELOW the rail height without damage to the liners on the truck remaining on the rail, there is no such protection where the derailed end is lifted excessively high.

Some clearance is provided to take care of normal deflections, but in re-railing this is mostly absorbed by deflection of the truck

springs. Lift of one end only should never exceed 6″ above the rail unless the other end is lifted sufficiently to separate the center plates on its truck and bolster.

This precaution must be taken to prevent damage regardless of whether lift is made under wreck conditions or in maintenance removal of truck.

ELECTRO-MOTIVE SWITCHERS

General Lifting Data

All EMD Switchers, including the NW-3 Road Switcher, are equipped with lifting lugs located at the bolsters. These lugs are designed for wire rope slings to be directly attached and ACCO-Registered Sling RR-EMD-4 was specifically designed to give an adequate safety factor with maximum ease of handling and to require the minimum hook-to-rail clearance when re-railing these engines.

Under normal conditions of lifting, two RR-EMD-4 slings and a lifting beam are used on each end of switcher. However, in an emergency one end of the SW-1, 100 ton, or the NW-2, 125 ton switchers can be lifted at the coupler. Due to the increased length of span of the NW-3, 100 ton road switcher the coupler lift is NOT recommended for this locomotive. For methods of blocking when using coupler hitch, see Fig. 15.

For general dimensions, location of lifting lugs, and hook-to-rail clearances required, see Fig. 16.

Specific recommendations are given on particular conditions of lift in this section.

SIMPLE DERAILMENT

Under conditions of simple derailment, where only one truck is involved and locomotive is upright, recommendations are as follows:

TYPES

SW-1
NW-2
NW-3

MAXIMUM WEIGHT — 248,000 lbs.
HORSEPOWER — 600 & 1000

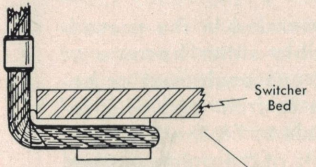

Cable Stake & Jacking Pad

For Emergency Lift Only on 600 & 1000 H.P. Switchers — Not to be Used on NW-3 Road Switcher

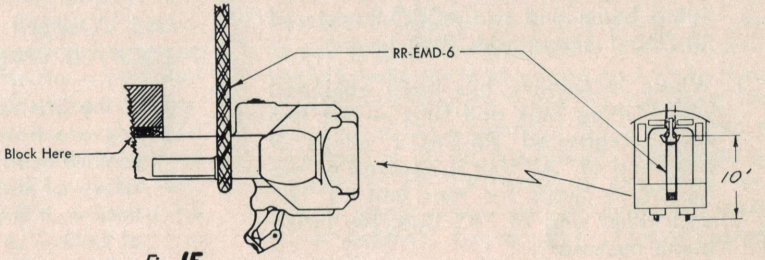

Fig. 15

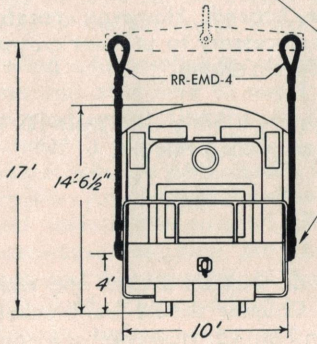

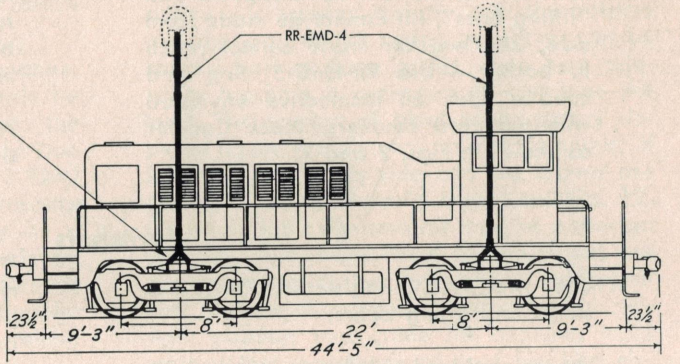

Fig. 16

Road Locomotives

1. Where lifting levers are available—Use lifting beam and two ACCO-Registered RR-EMD-1 slings, with EMD levers.

2. Where locomotive has been equipped with "Lifting Bars and Lugs"—Use two ACCO-Registered RR-EMD-2 slings if front end of "A" Unit is involved or two RR-EMD-3 slings for rear end of "A" and either end of "B" Unit. No lifting beam necessary.

3. Where front end of "A" Unit is involved, locomotive is not equipped with "lifting bars", lift cannot be made from side, and wrecker crane cannot reach to bolster — Use RR-EMD-5 sling and coupler hitch on locomotive equipped with standard couplers. Block Coupler as shown in Figs. 2 and 7.

IF IT CAN BE AVOIDED AT ALL DO NOT USE COUPLER HITCH ON LOCOMOTIVES EQUIPPED WITH RETRACTABLE COUPLERS.

4. If the lifts recommended in the preceding are not possible either because of lack of suitable crane equipment or because of damage to front end of locomotive, it is possible to lift the front end of EMD—"A" Units at the points marked "G" on Figs. 5 and 10. Locomotives have a "hard spot" where several structural members meet at this location and frames are braced. However, careful blocking is necessary to prevent crumpling the side sheathing.

   ACCO-Registered Sling—RR-EMD-10 is designed for making this lift.

Switchers

1. Use two ACCO-Registered RR-EMD-4 slings and lifting beam.

2. Where standard switcher is involved lift may be made with RR-EMD-6 and coupler hitch. Coupler should be blocked as shown in Fig. 15. However, see caution against use of this hitch on NW-3.

LIFTING AND ROLLING LOCOMOTIVES UNDER WRECK CONDITIONS

It would be impossible to give specific instructions or recommendations covering lifts under wreck conditions. In these lifts the actual situation, the timing, hazard to life, present damage to equipment as well as the number and capacity of wrecker cranes available are all highly important factors, which must be considered by the Wreck Master in deciding the action to be taken.

Recommendations made in this section are based only on general wreck conditions and may or may not be usable under the conditions of the particular wreck.

Rolling a locomotive should normally be done, one unit at a time to avoid undue strain on coupled ends. Usually, in these cases, the coupler is jammed. This is particularly true where units are permanently joined by a fixed coupler. Any attempt to equalize the pressure and release the coupler will not only be a hazardous operation, but likely will seriously increase the damage as well. Therefore, it will usually be found best to burn the coupler through before attempting to start rolling operations.

Two cranes, one at each end, should be used to roll a locomotive. While a 250 ton crane might handle the actual load and while slings of sufficient strength could be furnished, the structure of the locomotive is not designed to withstand a lift of this nature. Therefore, an attempt to lift both ends at the same time with a single crane can hardly fail to result in a buckled frame and crumpled body structure.

It should also be considered that the body structure is heaviest directly over the bolsters and the load of the rolling operation can be carried best at these points. Even here adequate blocking is necessary to distribute the load. The amount of blocking necessary depends upon the amount of roll required. If locomotive is on its side and the cranes are pulling at a considerable angle, see Fig. 12, the whole top of locomotive must be protected to minimize damage since the major pull will be on this part during the initial rolling operation. As the locomotive approaches an upright position and crane lift becomes more vertical the importance of roof blocking de-

creases and the side blocking becomes more important.

Fig. 12 shows a typical rolling operation. Two ACCO-Registered Railroad Slings, RR-EMD-7 are used for each end. Each sling passes from the hook down the side, around the center plates, back to and up the side, and then back to the crane hook.

It will be noted that in the operation shown the load of rolling falls on the "underside" sling at each end. These slings have been designed to take this loading.

Fig. 13 shows the operation when the rolling is completed. Here the load is completely carried by all four slings, two at each end, and the locomotive is securely held for either lifting or dragging as may be necessary.

ACCO-Registered Railroad Slings, RR-EMD-7, are specifically designed for this type of lifting. They have the minimum weight and bulk for the required strength and give maximum ease of handling possible and still provide protection against cutting. All blocking shown is to protect the locomotive and not the sling. ACCO-Registered Railroad sling Equipment is rugged.

Fig. 13 shows the minimum hook to rail height (24 feet) necessary to re-rail using RR-EMD-7 slings. Where at all possible this length of sling should be used for two reasons:

1. To prevent the crane hook bearing on the top of the locomotive when locomotive is laying on its side.
2. To reduce the crushing action on the top of the sides of the locomotive after rolling is completed and actual lifting begun.

However, it is apparent that this clearance will not be possible with many of the wrecker cranes now in use. Therefore, ACCO-Registered Railroad Slings, RR-EMD-8 have been designed to require only 20 feet from crane hook to rail.

It should be noted that an extension, RR-EMD-8-A is required for each "underside" sling when rolling, to prevent the crane hook bearing on the top of the locomotive. This extension is removed when rolling is completed and before lifting starts.

An additional precaution is necessary when using RR-EMD-8 slings for lifting the locomotive. The crushing load at the top of the sides is approximately the same as the load lifted.

Lifting and Rolling Under Wreck Conditions

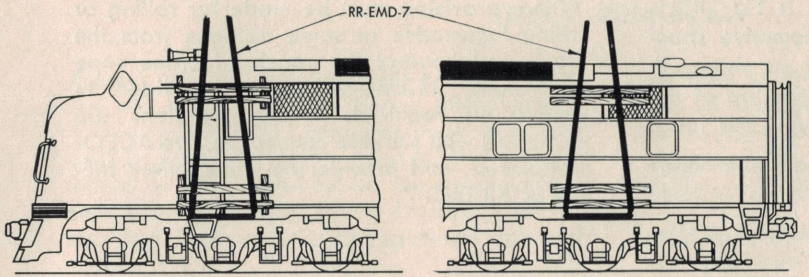

Pad as Shown Above

Fig. 11

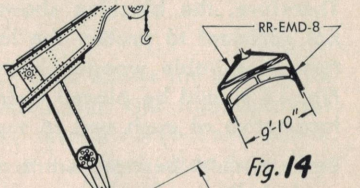

Fig. 14

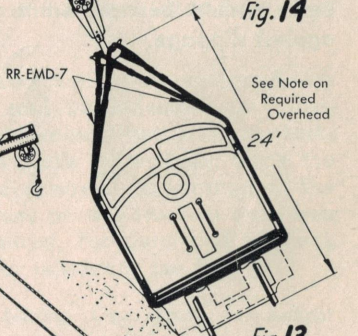

Fig. 13

Place Two Cranes Thus

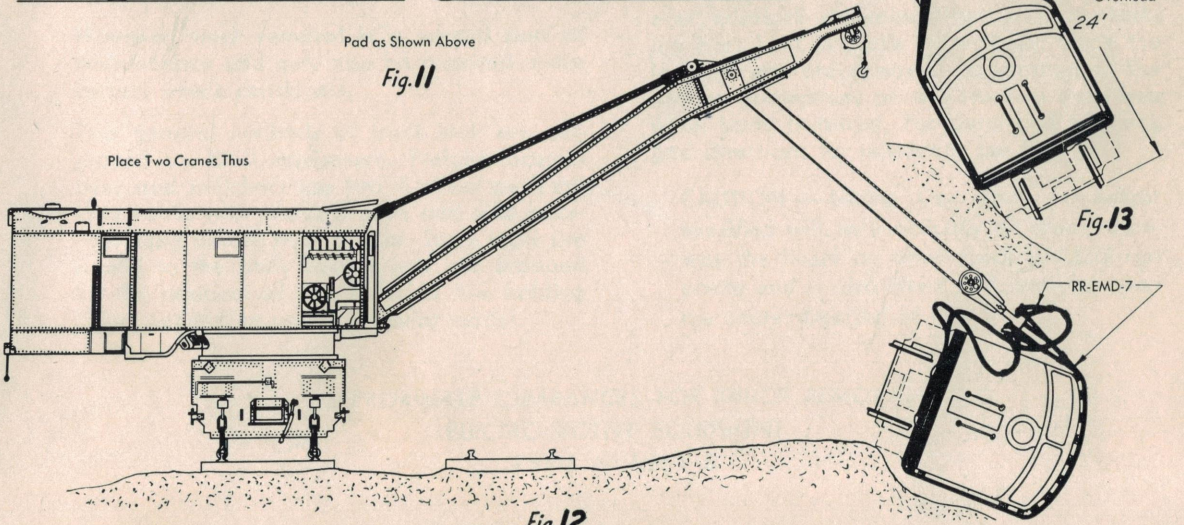

Fig. 12

Therefore, the blocking shown is Fig. 11 is not sufficient to protect the locomotive structure. A suitable wooden beam as shown in Fig. 14 should be placed over the top of the locomotive at each end to support this load.

Beam should be notched to hold the slings against slippage.

Where provision must be made for rolling or lifting locomotive at some distance from the track and beyond the reach of crane rope extensions, RR-EMD-9 can be provided in lengths as required. These extensions are equipped with suitable connectors, are ACCO-Registered, and provide the same safety factor as RR-EMD-7.

TRUCK REMOVAL

Frames used on EMD Locomotives and Switchers are amply strong to permit lifting operations with the trucks attached as long as one end is supported at the bolster. Down loads shown in the various tables are computed on this basis as are the Safety Factors given for the EMD series of ACCO-Registered Railroad Slings.

However, truck removal is a normal part of maintenance and may also be required under certain wreck conditions.

Two general methods of truck lock are employed on EMD equipment. Freight locomotives and switchers use two 4-wheel pedestal type trucks with pedestal jaws and side bearings integral with truck frames. Truck locks are bolted to the body bolster and are dropped by the removal of the three to five holding bolts, depending upon particular model.

Removal of these bolts allows the locks to fall out of engagement with the side bearings. Separation of the service connections, power, air, etc., permits the truck to drop free when body is raised.

EMD Passenger Locomotives are equipped with 6 wheel trucks also of pedestal type. However, interlock is obtained through inside locking bars held in place by wedges. Once the locking bars are removed, separation of the service connections permits truck to drop free when body is raised. For details of interlock and directions for releasing, see Fig. 17.

CAUTION — Lifting Car Body to height specified will, in practically all cases, damage the liners on other truck UNLESS opposite end is also lifted sufficiently to clear the center bearing of that truck.

APPROXIMATE CLEARANCES FOR TRUCK REMOVAL
ELECTRO-MOTIVE EQUIPMENT.
TABLE NUMBER 3.

TABLE NO. 3

Approximate Clearances for Truck Removal

Electro-Motive Equipment

Locomotive	End Lifted	Direction of Removal	Raise Car Body	Raise Opposite End	Equipment to Remove to Clear Truck
EA-6 and EA-7	Front	Sideways	21 inches	12 inches	Cab Door Steps
EA-6 and EA-7	Front	Endways	48 "	12 "	
EA-6 and EA-7	Rear	Sideways	21 "	12 "	
EA-6 and EA-7	Rear	Endways	42 "	12 "	
EB-6 and EB-7	Either	Sideways	21 "	12 "	
EB-6 and EB-7	Either	Endways	42 "	12 "	
Switchers	Either	Sideways	6 "	To clear	Foot Boards
Switchers	Either	Endways	27 "	" "	
FT and F2-A	Front	Sideways	6 "	" "	Cab Door Steps
FT and F2-A	Front	Endways	48 "	" "	
FT, F2-A and F2-B	Rear	Sideways	6 "	" "	
	Rear	Endways	42 "	" "	
F2-B	Front	Sideways	6 "	" "	
F2-B	Front	Endways	42 "	" "	
F3-A	Front	Sideways	14 "	" "	Cab Door Steps
F3-A	Front	Endways	48 "	" "	
F3-A and F3-B	Rear	Sideways	14 "	" "	
	Rear	Endways	42 "	" "	
F3-B	Front	Sideways	14 "	" "	
F3-B	Front	Endways	42 "	" "	

TABLE NO. 4

Approximate Truck Weights

Electro-Motive Equipment

(Note — Weights shown are approx. for complete truck.)

Truck Type	*Approx. Weight*	*Free Height At Side Bearing*	*Used On*
4 Wheel — Complete	30,000 lbs.	45 5/8 inches	600 H.P. Switcher
4 Wheel — Complete	33,000 lbs.	45 5/8 "	1000 H.P. Switcher and TR Model
4 Wheel — Complete	39,000 lbs.	48 "	FT & FTS Models
4 Wheel — Complete	38,000 lbs.	48 "	F3
6 Wheel — Complete	51,420 lbs.	46 5/8 "	EA-6 & EA-7

Interlock Details—Passenger Locomotives

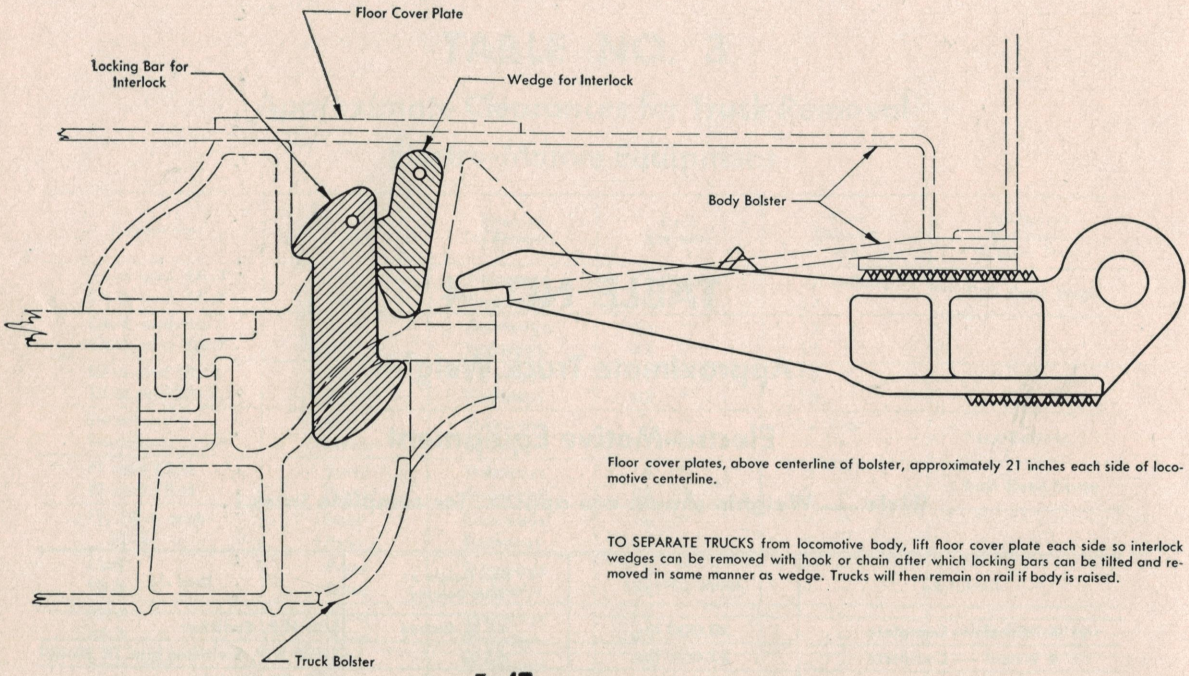

Floor cover plates, above centerline of bolster, approximately 21 inches each side of locomotive centerline.

TO SEPARATE TRUCKS from locomotive body, lift floor cover plate each side so interlock wedges can be removed with hook or chain after which locking bars can be tilted and removed in same manner as wedge. Trucks will then remain on rail if body is raised.

Fig. 17

APPLIES TO PASSENGER LOCOMOTIVES ONLY

NOTE — For information RELATIVE TO SPECIAL ACCO-REGISTERED SLINGS designed to handle Electro-Motive Diesel Engines, Traction Motors, Generators, etc. during Maintenance Operations request the ACCO RR-EE series.

The slings shown in the foregoing sections have been designed to conform with allowable Overhead clearances of average Railroad Wrecker Equipment. However, Slings can be furnished to meet specific overhead limitations.

ELECTRO-MOTIVE DIVISION

Section 2

ACCO

TRADE MARK

DH-118-2

PRINTED IN U.S.A.